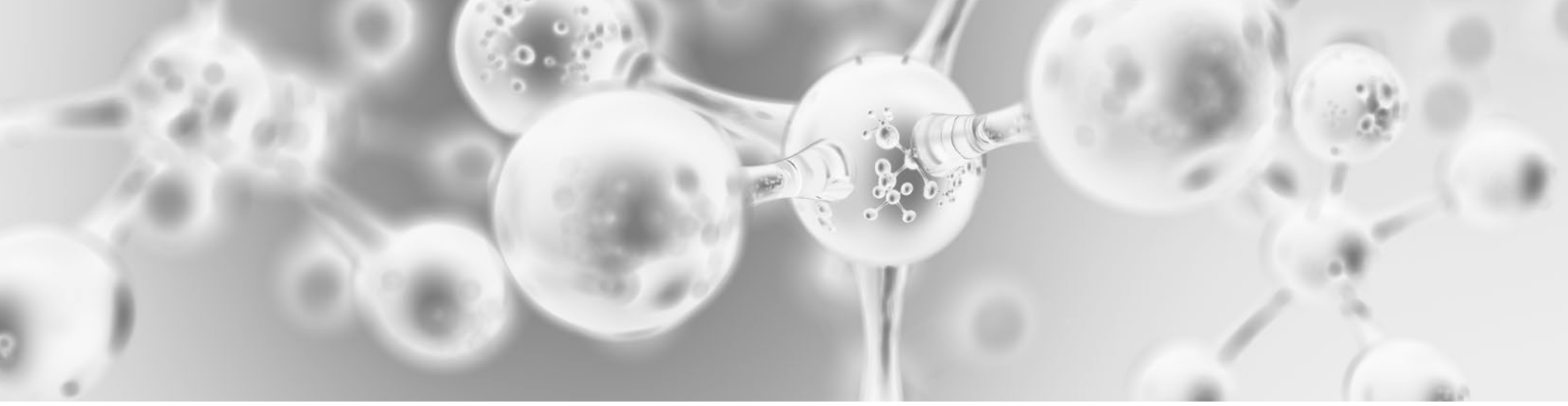

ESS bilbao

newsletter

OCTOBER 2020

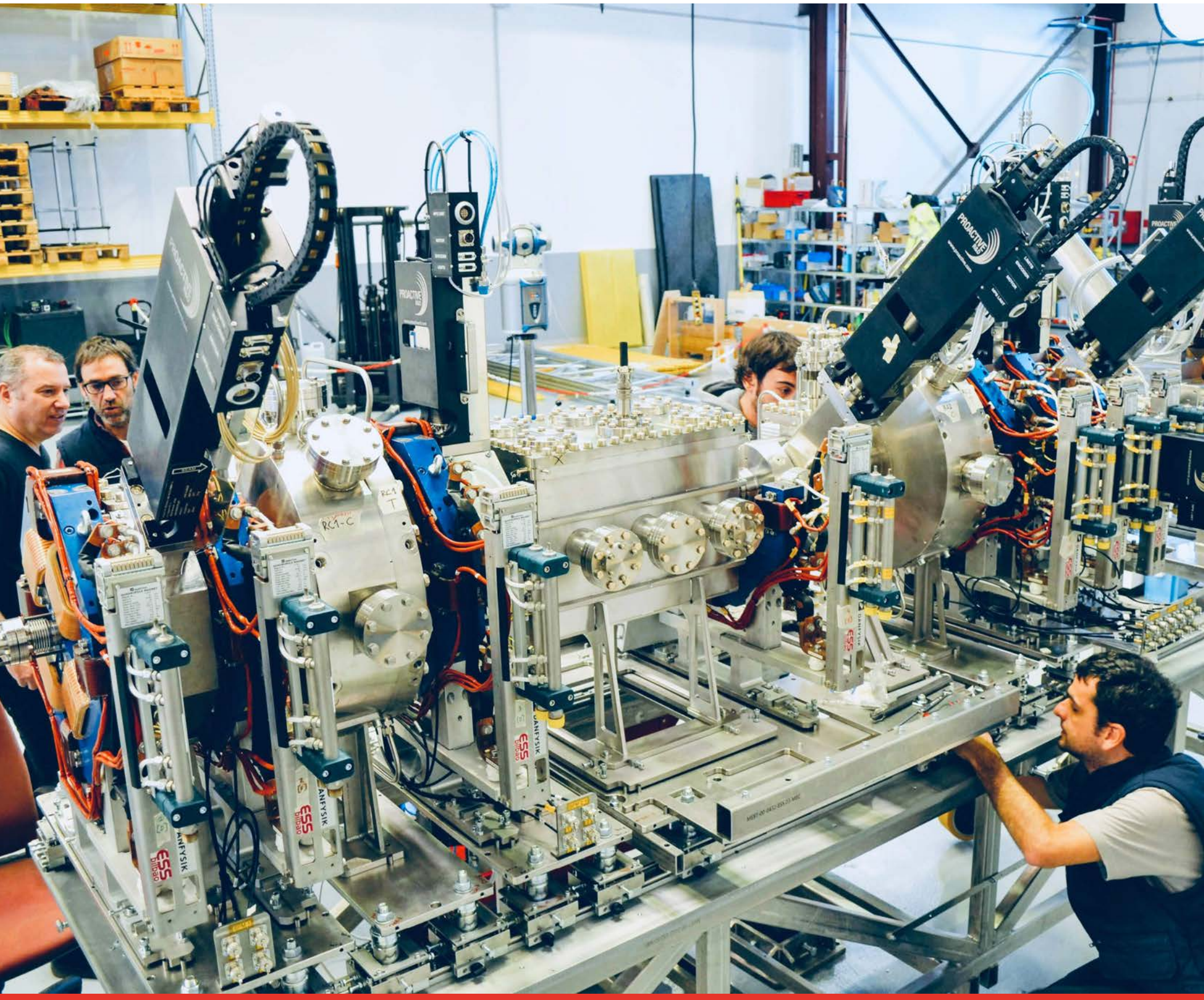

summary

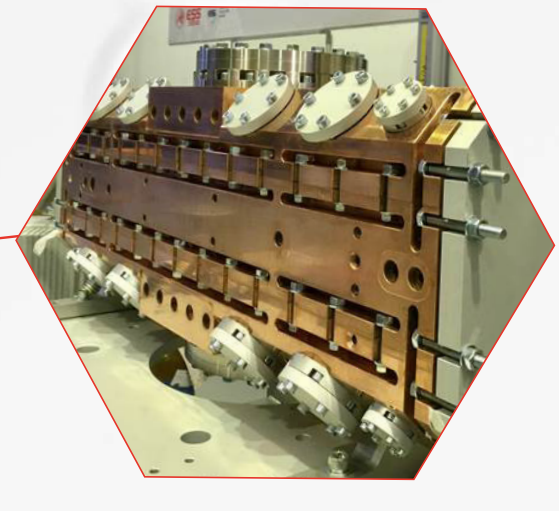

MARIO PÉREZ
Executive Director

editorial

ESS Bilbao new channel in the current context

The new times that we are all living encouraged us opening new and more efficient communication channels, which aimed at bringing us more than ever closer to both our collaborators and stakeholders.

This first issue of this ESS Bilbao Newsletter tries to fulfil this objective by covering a wide range of topics, and it is our goal to publish it regularly.

It gives you an overview of both, the activities carried out by ESS Bilbao, as well as other articles on selected topics in the realm of neutron and accelerator science and technology that we consider may be of interest to you.

Communication in the current context has the highest importance for us, and therefore going forward we will be regularly publishing new issues of this newsletter to keep you up to date.

I hope you will find the content of this first issue of your interest and that you will enjoy reading it.

Please stay healthy and safe.

Working despite the pandemic

Months ago, the world, society and our daily lives, turned 180 degrees, turned upside down. The routines that until then we kept leapt through the air like a crystal when hit by a stone. Our society began to shake, and our life was fragmented. All of this is the result of a microscopic bug, a virus called SARS-CoV-2, which belongs to the Coronavirus family and which causes the disease of COVID-19, which has been so familiar to all of us since the last months.

Actions to maintain the activity

The rapid spread of the virus among the Spanish population and the cascade of serious events, prompted the Government of Spain to take extraordinary measures to deal with the pandemic. These measures forced many organizations to implement extraordinary actions to maintain their activity. This has been a great challenge for most companies across the country, and for ESS Bilbao. However, with a rapid response capacity, as any crisis situation requires, ESS Bilbao prepared from the outset a series of action protocols, a contingency plan to guarantee the well-being and health of all its staff, while preparing the necessary tools for the establishment of teleworking in all its centres.

The entire ESS Bilbao team works with the enthusiasm and tenacity of being able to be back to normal as soon as the situation will allow

This new modality of teleworking has established new routines and a daily discipline. Now more than ever in these moments in which social distancing is a citizen's duty, it is when we must be more united, for this reason, all the divisions of ESS Bilbao held a daily video conference meeting in which the status of the tasks, the development of their jobs, and last but not least, they shared the personal experiences that each one is living in their families.

Nevertheless, after these months of uncertainty and great challenges, ESS Bilbao staff are returning to their work centres, always keeping and taking the safety and hygiene measures included in an action protocol against COVID-19.

As of today, the entire ESS Bilbao team are working at the differente offices and laboratories within the "new normality".

MEBT Buncher

The ESS Bilbao MEBT - Medium Energy Beam Transport-, is a section of the ESS accelerator that is already on site at Lund, as an In-Kind Spanish contribution

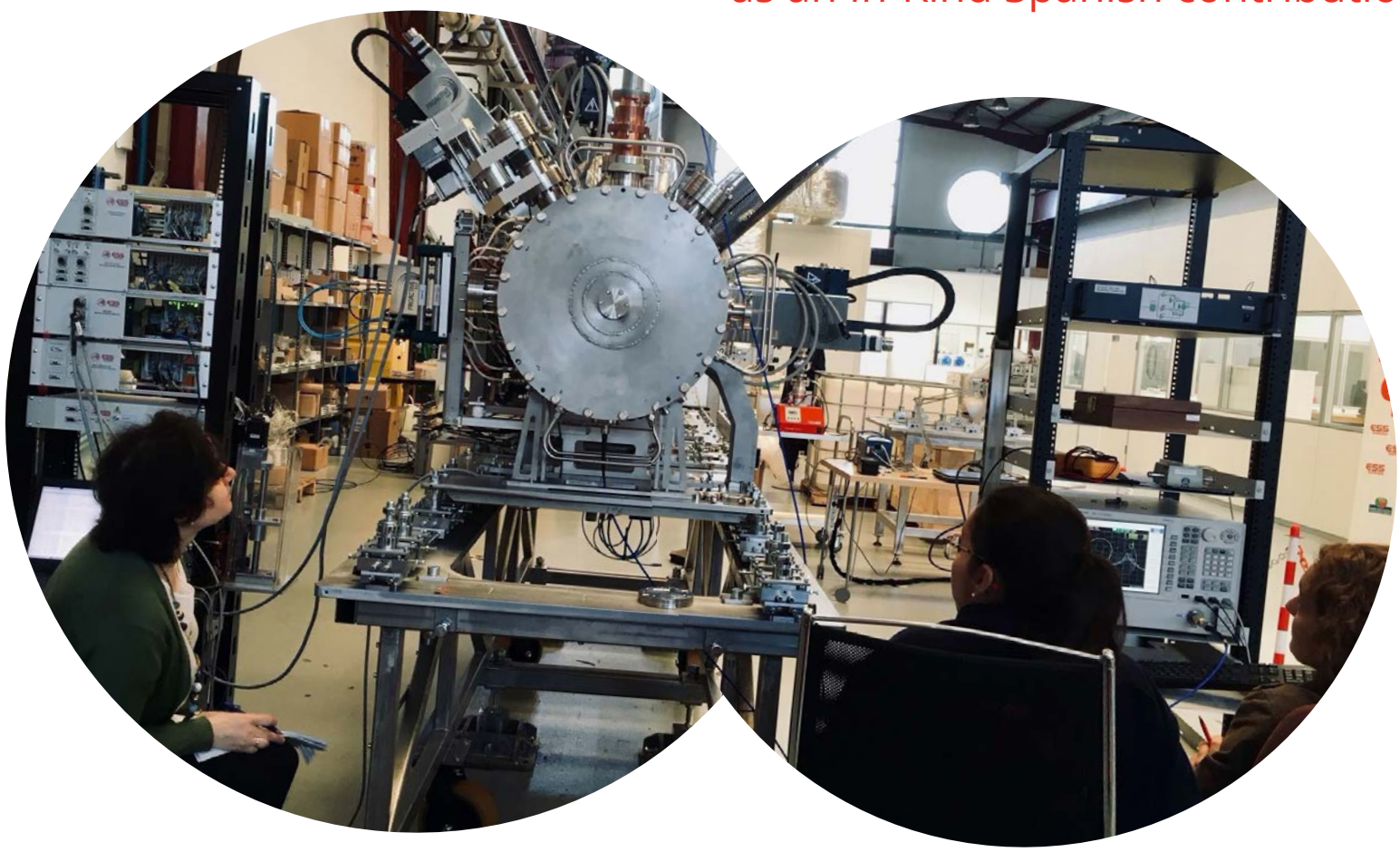

The MEBT is a key component of the ESS accelerator that matches the RFQ output beam characteristics to the DTL input, transversally with quadrupoles and longitudinally with RF buncher cavities. The beam pulse is shaped using a stripline fast chopper.

The Buncher cavities one of the main MEBT components have been designed according to electromanetic, thermo-mechanic, RF and beam dynamics. The bunchers are manufactured from stainless steel copper plated with a layer of 30 µm-thick. The cavity has a nose-cone single gap type used for longitudinal focusing with a resonant frequency of 352.2 MHz.

After the process of design and manufacturing a thorough acceptance test validation is needed including metrology, pressure test, vacuum and the leak test, low power RF measurements with bead-pull, and the finally the high-power conditioning which is currently being carried out.

Design Phase

The electromagnetic design of the buncher cavity starts with a 2D parametrized drawing. Each of these parameters can have any value within a certain range, so

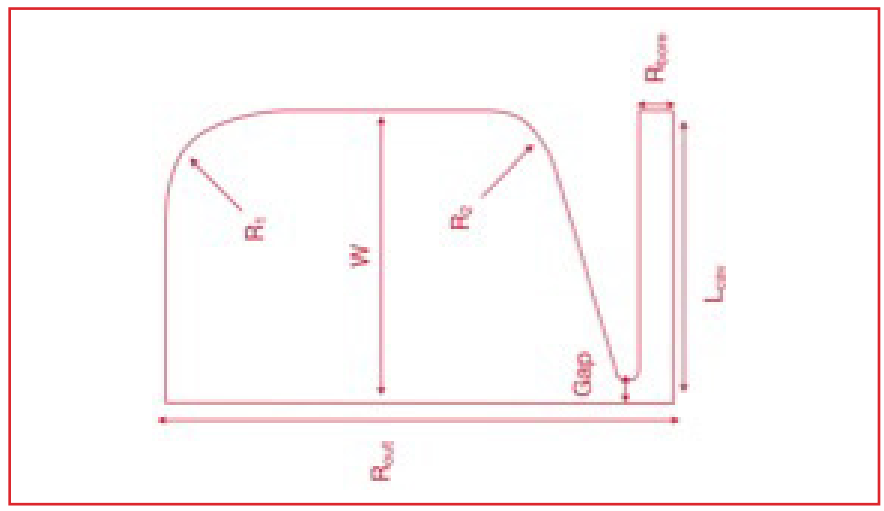

the optimization process aims to automatically select the optimum set of parameters that result in a cavity that fulfills its operational requirements (resonant frequency of 352.2 MHz, effective voltage of V0T=160 kV, Kilpatrick limit below 1.4). Also, resulting cavity has to have a volume and power losses as small as possible). This process is driven by scripts in Python or Mat-lab running simulations in SuperFish (in a preliminary stage) and in Comsol Multiphysics for the final design, 3D simulations and thermal calculations.

Manufacturing Process

The buncher cavity has been manufacturing from stainless steel copper plated (30 um layer) and including a helico-flex for vacuum seal, instead of the brazing. The manufacturing process start with thermal treatment of the SS, then the machining and the welding of the ports are performed. Before the copper plating a thorough validation is needed and it includes: metrology (tri-dimensional system), surface roughness, pressure test, vacuum and the leak test and finally a campaign of low power RF measurements are required. All these tests are repeated after the copper plating.

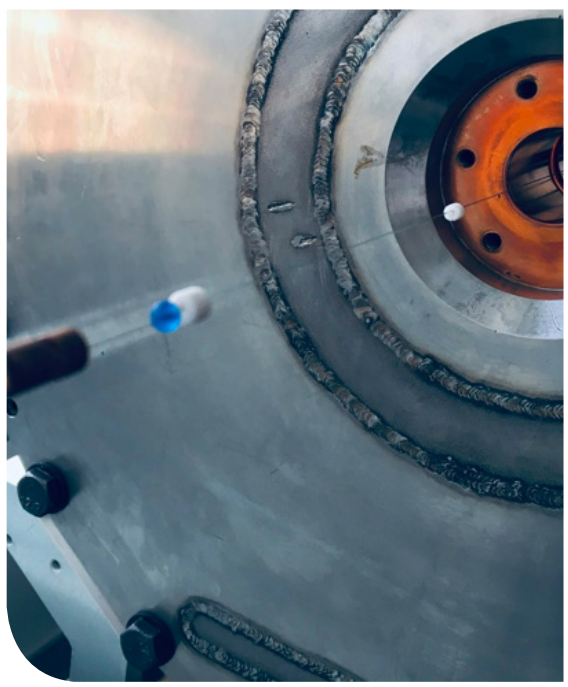

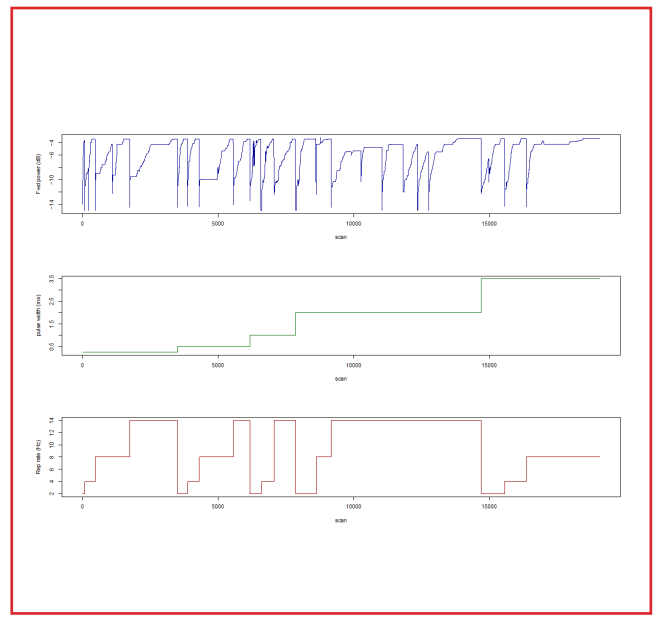

Current status: Conditioning & Solid State Power Amplifiers

When buncher cavity and its coupler are manufactured, assembled reaching high vacuum pressure, they still need to be conditioned before coupling high RF power.

This process of conditioning related to two main phenomena: multi-pacting and break-down. The process can be described as a gradually increase of the power, while maintaining the vacuum pressure within safety limits.

After enough time the vacuum pressure and breakdown rate decrease and once certain conditions are met, we can consider the cavity and coupler have been conditioned. This depends on the geometry of the cavity, required performance and it surface history conditions.

How a Buncher cavity works?

The reference particle arrives at the gap when the voltage is rising in time and is zero, so there will be essentially zero average energy gain. Energy gain is expressed as ΔW=qV_o Tcosϕ. Where q is particle charge, V_o T is the effective voltage and ϕ is the relative phase of the arriving particles. Phase spread is adjusted varying field amplitude, keeping phase at -90° the phase acceptance is maximum, extending over the full 360◦.

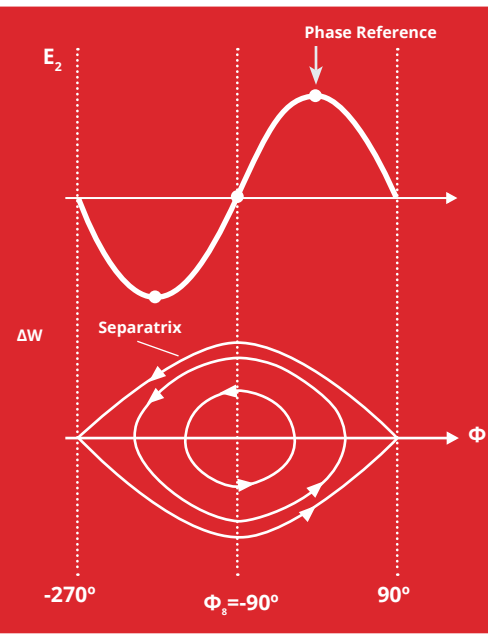

INTERVIEW

Félix Jiménez. *Head of Instrument Division*

"MIRACLES project, by nature, is an amazingly multidisciplinary project that involve skills from different fields of knowledge"

What is the biggest challenge you are facing being the leader of the In-Kind contribution MIRACLES project?

An exciting challenge is the coordination of the efforts of a significant number of people, each one with their own specific expertise, and put them all together towards the same goal. And the MIRACLES project, by nature, is an amazingly multidisciplinary project that involve skills from different fields of knowledge.

But probably the main challenge is to demonstrate abroad that we can do it. This is the first big project at ESS-Bilbao dealing with neutron scattering instrumentation. Certainly, Spain has previous experience in developing neutron scattering instrumentation in the past; we can see some examples at ISIS and ILL. However, this is the first time that we are building a whole neutron instrument, from source to detectors (space), and from conceptual design to commissioning (time). But we turn this fact into a challenge; we have a great team here working really hard. And now, there is no doubt that we can do it!

Regarding, economic impact what are the big numbers of this key project?

The cost book for this project is 13.4 M€, established at the beginning of the project, after tough negotiations with ESS in which I was involved.

The largest portion comprises the delivery of components (design, manufacturing, installation). The good thing is that, thanks to the outstanding level of our industry, I envision that more than one third of our budget dedicated to design and fabrication of neutron instrumentation could be provided locally.

MIRACLES instrument, what is exactly a backscattering spectrometer?

Neutron spectrometers are an essential probe to study complex dynamics in biomaterials, polymers, functional materials, etc… since there is a direct link between the energy transferred between the neutron and the sample and the intrinsic observable dynamics of such sample.

MIRACLES is a time-of-flight backscattering spectrometer, where neutrons are transported from the source to the sample through a 160-m neutron guide. Their energy is selected using time-of-flight methods (choppers). Neutrons that interact with the sample modify their direction and energy, and the information about the sample is in these modifications. Those changes are analyzed in an extensive mirror (analyzer), that reflects neutrons of one determined energy back to a large array of 3He detectors near the sample. Such backscattering reflection ensures the high resolution of the instrument.

Is MIRACLES the state of the art in neutron science?

MIRACLES will be a game-changer, from the point of view of flexibility, bandwidth and how neutron scattering experiments are developed and conceived nowadays. Its main features were stated by its main proposer, Heloisa Nunes Bordallo, Niels Bohr Institute, University of Copenhagen, still involved in the project providing an indispensable advisory.

MIRACLES will be a versatile instrument with tuneable flux and energy resolution, displaying an accessible time scale for the dynamics of physical phenomena within a range between some tens of picosecond to the nanosecond.

But there is also an additional characteristic, that applies to all ESS instruments. It is the amazing neutron flux expected. This does not only apply to the capability of performing experiments faster. What is fantastic is that the expected flux can open the door to observe new phenomena, concealed in the current neutron facilities.

Could you please talk about the science case and the applications of MIRACLES in our daily life?

Sometimes, to approach the outcome of basic research to direct applications is not straightforward. Basic science has the purpose of generating knowledge that can be utilized later on (not necessarily in the near future) to develop the applications/devices beneficial to the society. However, here I can sketch out some examples to illustrate what MIRACLES can do.

"This is the first time that we are building a whole neutron instrument from source to detectors, and from conceptual design to commissioning"

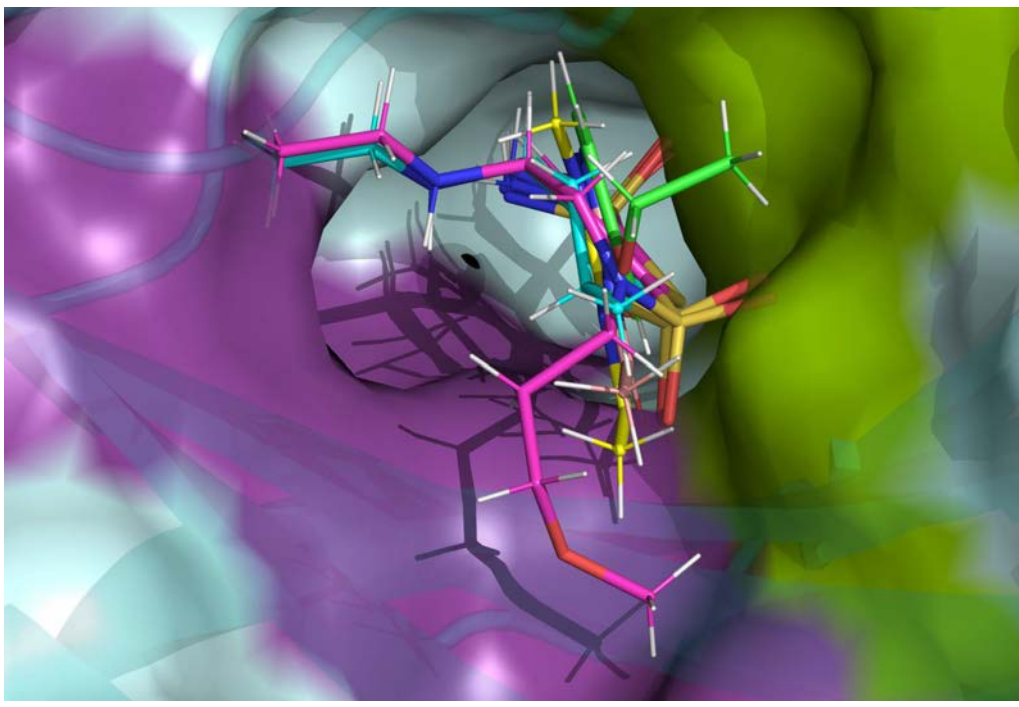

From the point of view of life sciences, MIRACLES can probe the dynamics of biomolecular systems, and other diffusive processes, essential to understand functional processes or enzymatic reactions: from the dynamics of protease enzymes or spike proteins, which play an essential role in the life cycle of a virus (a topic of maximum relevance today) to the dynamics of encapsulated antigens for vaccination; from interactions of antibiotics in hybrid systems to the mechanisms of drugs that can be used in potential therapies for degenerative diseases, like cancer or Alzheimer.

From the point of view of next-generation materials, MIRACLES will be capable of revealing, within a determined dynamic window, motions of molecular groups or polymer chains in a polymer blend. MIRACLES can also contribute to the study of the motions involved in energy-efficient materials, like ionic conductors, for all-solid-state rechargeable batteries. Finally, MIRACLES can shed light into the spin correlations in qubits made of molecular magnets or skyrmions, contributing to deliver the transition to quantum computing.

PIONEERS IN NEUTRON TECHNOLOGIES

Juan Colmenero
Materials Physics Center
(CFM_CSIC-UPV / EHU)

" The research with neutron techniques that is being carried out in the Basque Country is attracting a great deal of interest to other countries around us."

Discovering new materials and improving those already known is an enquiry for many researchers who after decades of study keep on investigating further and deeper how materials work, their characteristics, properties and structures.

A clear example of this is the Excellence Research Group of Polymers & Soft Matter, lead by Professor Juan Colmenero, who takes inspirations from classical polymer physics, soft matter physics and the physics of condensed matter.

Over the years, this group has succesfully developed a robust and pioneering methodology to investigate structure and dynamics of polymer and glass-forming systems in general at different length and time scales. This methodology is based on the combination of different experimental relaxation techniques with neutron scattering and molecular dynamics simulations.

The staff of the group is composed by experts in the different techniques/methods, being Professor Arantxa Arbe responsible for the scattering techniques, including X-Ray and neutrons.

Which are the current status of neutron developments studies in general and at the CFM in particular?

Juan Colmenero. *The research with neutron techniques that is being carried out in the Basque Country is attractive to the rest of the countries around us. Our CFM researchers are collaborating with research groups from different international centers achieving progress in the development of new materials.*

The studies with neutron techniques are one of the strategic base technologies identified in the Basque Government's Science, Technology and Innovation Plan through the Neutron Science Strengthening Program, which is based on:

- Pre and postdoctoral Grants.
- Ad-hoc calls for Ikerbasque Professor & Fellow positions: bringing new talent to the Basque Science, Technology and Innovation Network in the area of Neutron Science.
- Establish agreements with main neutron sources to foster basic research in neutronics.
- Strengthen Excellence Research Groups & BERCs capabilities in neutron science in collaboration with other members of the Basque STI network and ESS Bilbao.

How do you see the future in neutron research in the Basque Country?

J.C. *The Basque Government is reinforcing research with neutron techniques through specific programs. These techniques are considered a key pillar for the science of the future. This will strengthen the scientific community so that it can continue to advance its studies with neutrons, thus benefiting areas such as energy, industry, and transportation. Medicine, too, will be another major beneficiary of neutron research, for example, in the development of new vaccines.*

The studies with neutron techniques are one of the strategic base technologies identified in the Basque Government's Science, Technology and Innovation Plan

Félix Fernández Alonso

Ikerbasque Professor

To continue advancing in the knowledge and development of new and increasingly advanced new generation materials, Colmenero has recently incorporated Félix Fernández Alonso into his research line, as an Ikerbasque Research Professor.

Professor Fernández Alonso is an international expert in Molecular Spectroscopy and his main research interests covers: neutron science, experimental & computational, materials discovery for energy applications & sustainability, emphasis on soft & nanostructured carbon-based media.

At his current position as Ikerbasque Professor at CFM, he leads a group of researchers with the aim of fostering the creation of new materials for a better society. *"Is an honour being part of CFM as Ikerbasque Professor"*. Ikerbasque, the Basque Foundation for Science has been in the last 13 years reinforcing the Basque science system through the attraction of researchers from all over the world.

The Spanish neutron community has been growing over the last 30 years producing research results of high scientific quality and been involved in key developments.

The benefits of our results will cover a broad of sectors will benefit the society.

WHAT'S GOING ON ESS BILBAO

QUALITY MATTERS

ESS Bilbao has a firm commitment to Quality.

ESS Bilbao has its Quality System certified under the ISO 9001: 2015 standard since 2019. The Certification focuses in ¨Design execution of R&D+i projects, design, and services and equipment development; all in the field of accelerator technologies and neutronic application". ESS Bilbao is also Certified under ISO 3834 for the Advancement Welding Facility (AWF), located in Júndiz, Vitoria-Gasteiz.

Furthermore, ESS Bilbao has recently obtained the ISO 45100 certification, reinforcing its commitment to the health and safety of its workers.

Currenlty, we are also pursuing at our AWF both ISO 9100, focused on aerospace standards, and ISO 13134 for brazing welding.

TRACKS PROJECT

TRACKS-Radiofrecuency Transmiters for particle Acelerator based on Klystrons and Solid state- that contribute to the technological development of society. This is a project co-financed between the period of 2018 and 2020 by the European Regional Development Fund (FEDER), which refers to the Multi-Regional Operational Program Spain.

The objective is to support major international scientific and technological infrastructures in which Spain participates, and those included on the ESFRI (European Strategy Forum on Research Infrastructures) roadmap.

Recently ESS Bilbao has submitted the economic report to the authorities and a monitoring committee is running to review the technical report focus on the developments achieved and the scientific, economic, and social impact which have had.

The RF Work Package has remarkably progressed over the last year, with most of the equipment already installed on site in Lund. As an example, the 3 modulators (JEMA Energy), all the circulators and loads (AFT), and 4 out of 6 Klystrons (Thales and CPI-ESSBilbao), have been already delivered to ESS.

STATUS TECHNICAL PROJECTS

The Monolith Vessel has been recently shipped to ESS Lund, marking a major milestone for the Target Team.

ESS Bilbao, together with our industrial partners AVS and Cadinox have been working very hard over the last years to make this happen. Our colleagues at Lund are very much looking forward to receive this component, as it will mark the begining of the installation of the whole target system.

The Target Wheel manufacturing is showing very good progress as well at Nortemecánica. Currently the welding process is in its last stages. Welding must be done very carefully, continuosly monitoring the expansions and checking step by step that each and every cassette fits into place inside the wheel.

The Shaft is being manufactured at Thuneureka, as it is at the final machining stages.

The Drive Unit, a turn key component maufactured by AVS, is already assembled and will undertake the Factory Acceptance Tests in the coming weeks.

LATEST NEWS BEYOND BORDERS

COLLABORATIONS

LENS Initiative

The League of advanced European Neutron Sources, LENS, is a not-for-profit consortium working to promote cooperation between European-level neutron infrastructure providers offering transnational user programs to external researchers.

ESS Bilbao has joined several meetings as observer and is taking part in working groups. With nine members from research European institutions and organisations, LENS focus its aims on the relationship between user communities and funding organisations, continuous improvement of source facilities, optimising resources between and aligning policies among partners.

BrightnESS2 (Bringing together a Neutron Ecosystem for Sustainable Science with ESS) is an EU funded project within the Horizon 2020 programme from the European Commission focus on research and innovation themes. 16 institutes and universities from Europe are involved plus one in South Africa within the partnerships. The aim of the project is further strengthening the network of facilities for foster research studies with neutron. ESS Bilbao is participating in the 3 Work Package, focus on In-Kind Contributions management.

The ELENA (European Low Energy accelerator based Neutron Facilities Association) has been recently funded by JCNS, LLB, INFN, IFE, Mirrotron and ESS Bilbao.

The main goal of the association is closing the gap, which is opening in Europe by the ongoing shutdown of research reactors, by joining forces in the promotion of Low Energy Accelerator - Based Neutron Sources as an alternative.

ACCELERATE is a Horizon 2020 project to support the long-term sustainability of the large research infrastructures through the development of policies, legal and administrative tools for a best management. As one of this mentioned infrastructures, and partner of the project, ESS carried out a report on the impact of its In-Kind model.

For which, ESS invited ESS Bilbao as a case study to be tested for demonstrate the effective impact of the In-Kind contribution method, since ESS Bilbao is unique for channelled all In-Kind works from Spain to ESS.

The socio-economic report analysed how the work and developments from ESS Bilbao related to the In-Kind Contributions to ESS made a positive return on scientific impact, economic impact, technology impact and social impact (outreach activities).

The outstanding results for the socio-economic impact report made ESS request ESS Bilbao to produce a leaflet and a report memory that summarizes the impacts of ESS Bilbao from a Spanish and an ESS perspective and put in value all the data drawn.

https://www.essbilbao.org/wp-content/uploads/accelerate/Accelerate_Report.pdf

COLLABORATION AGREEMENT BETWEEN ESS BILBAO AND CIEMAT

"One of the great challenges of the LIPAc is the high beam power that would lead to critical effects in case of wrong operation or beam losses"

Angel Rodríguez *ESS Bilbao secondment at LIPAC in Japan*

Collaboration agreement between ESS Bilbao and CIEMAT

ESS-Bilbao is participating in the LIPAc project in Rokkasho, Japan, through a collaboration with CIEMAT and Eurofusion. The collaboration is performed by one of our engineers, Angel R. Páramo, that is working in LIPAc as part of the Beam Instrumentation group.

What is the core of LIPAC Project and what is the reference center in Japan where you are working?

For the development of nuclear fusion reactor one of the main challenges is the irradiation faced by structural and functional materials. For testing and validation of materials an accelerator-based neutron source using deuteron-lithium nuclear reaction is suitable, and the development of the International Fusion Material Irradiation Facility (IFMIF) was addressed.

IFMIF will generate neutrons with an energy spectrum and doses like those that should be withstood withstand in a fusion reactor. For the development of IFMIF a series of technologies need to be previously validated, one of them is the Linear IFMIF Prototype Accelerator (LIPAc) currently under commissioning in LIPAc, Rokkasho (Japan). Finally, all the technologies will be put together in the experimental facility of IFMIF-DONES.

How all this is framed within EUROFUSION project

For the development of LIPAc a collaboration was stablished between Japan and the European Union under the Broader Approach agreement. The collaboration is carried out by the participating institutes: CIEMAT (Spain), CEA (France), INFN (Italy), SCK-CEN (Belgium), F4E (EU) or QST (Japan). In this context, ESS-Bilbao participates in LIPAc as third-link party to CIEMAT under the Eurofusion framework.

What are the main milestones of this intercontinental project

The LIPAc accelerator aims to the demonstration of the world most powerful deuteron accelerator, with currents up to 125 mA, energies of 9 MeV and operation in continuous wave. The accelerator is composed by different systems: injector, LEBT, RFQ, MEBT, HEBT, Beam Dump, RF chains or Beam Instrumentation. All the work led to successful acceleration of 5 MeV, 125 mA deuterons in low duty cycle (pulses of 1 ms) attained in summer 2019. Currently LIPAC is under preparation for operation in continuous wave.

Tell me about your tasks in the LIPAC, main lines of research and the role you have in Japan

The ESS-Bilbao collaboration for LIPAc commissioning is centred on the Beam Instrumentation. One of the great challenges of the LIPAc is the high beam power that would lead to critical effects in case of wrong operation or beam losses. For which there is a full set of instrumentation from the laboratories participating in LIPAc, CIEMAT, among others.

It is also important to point out that LIPAc has some similar characteristics to ESS and the MEBT that ESS-Bilbao has developed as In-Kind Contribution. Thanks to the experience obtained during the ESS MEBT development it has been possible to adapt better to the LIPAC project, being able to better understand LIPAC instrumentation and help to its commissioning. Similarly, hopefully the LIPAC experience will help for the ESS commissioning, the development of the ESS-Bilbao local source, or other European projects as could be DONES.

IN HOUSE PROJECTS

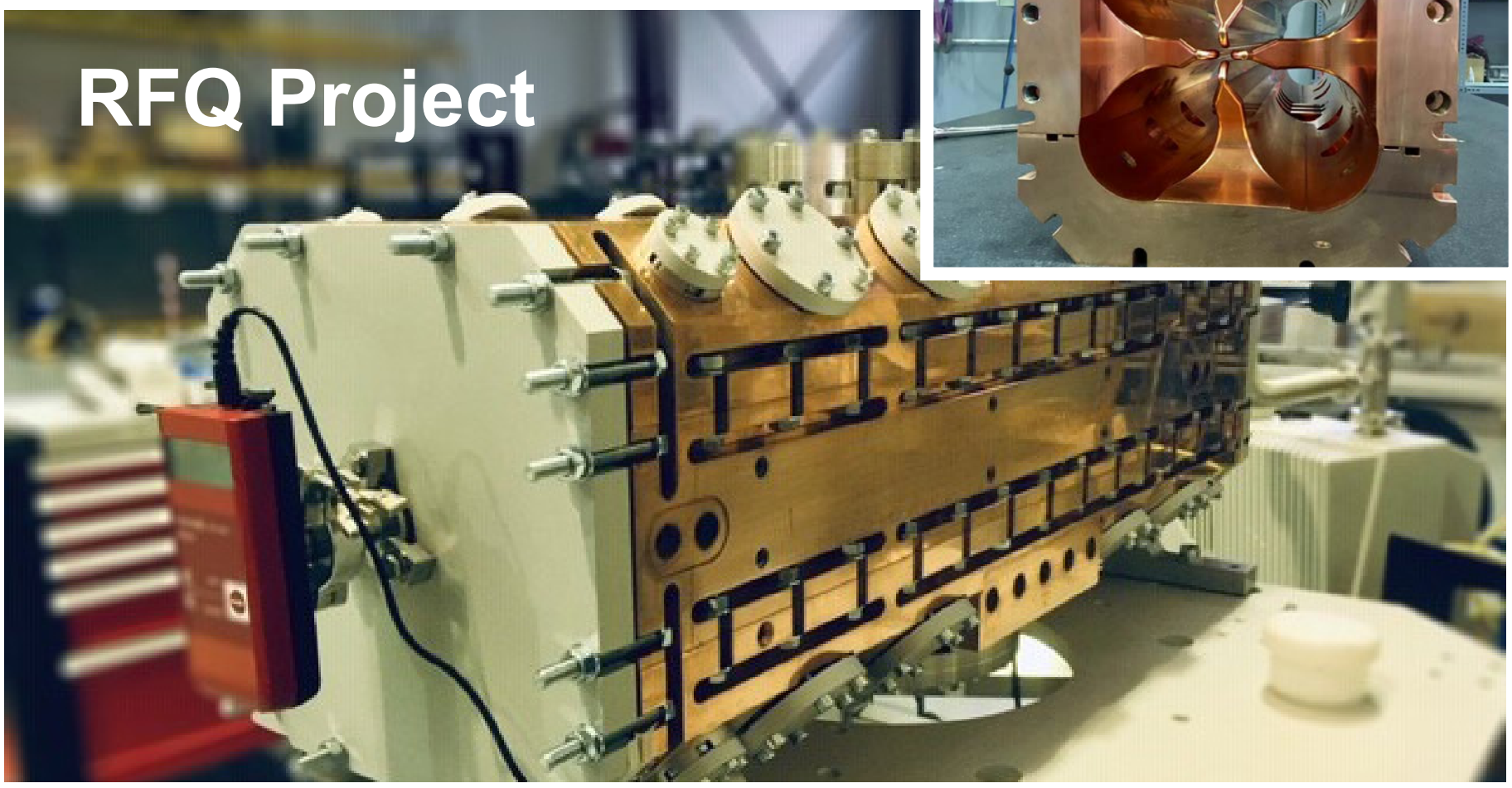

The ESS Bilbao RFQ is a linear accelerator that works as a bridge between the high voltage acceleration of the ion source and the other RF cavities. It is a key component, since it accelerates protons from 45keV to 3MeV while keeping the beam focused.

The RFQ fulfils three different tasks at the same time: accelerates the beam, keeps it focused transversely and group particles longitudinally in bunches, optimizing the acceleration performance for the following RF cavities like the DTL or the superconducting cavities.

Innovative assembly system

The RFQ is one of the in-house flagship projects. The team in charge of it started the design of that component in collaboration with the industry, with the aim of developing a new technology in terms of assembly. Recently, the latest vacuum test has been successfully finished.

The RFQ consist on 4 segments with a total length of about 3 meters. The vanes that form each of the segments are assembled using polymeric vacuum gaskets and are not welded by brazing (the conventional approach). This innovative assembly system technology has been previously used in the manufacturing process of the RFQ for RAL-ISIS neutron source and reference center in the field in the UK.

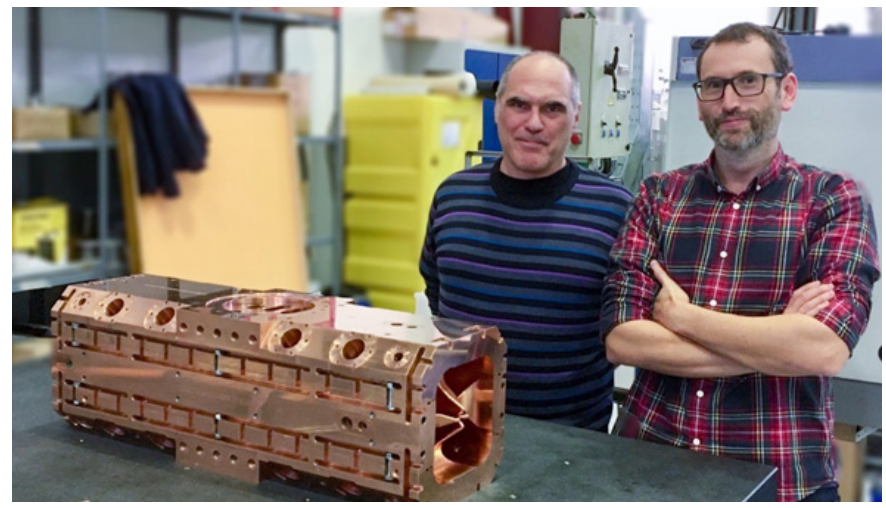

This system has the main advantage that if the assembly is not perfect in its alignment, it can be disassembled and reassembled without prejudice to the manufacturing process, while if it was welded by brazing there is no option to assemble and disassemble the system. The disadvantage, on the other hand, is that it is not 100% guaranteed that the vacuum levels required to operate an accelerator are achieved. For this reason, it was decided to manufacture a first segment in which to test this technology.

The vacuum tests of the first segment of the ESS Bilbao RFQ have been successfully completed and the technology has been validated thanks to the good results of the vacuum tests carried out at the ESS Bilbao facilities.

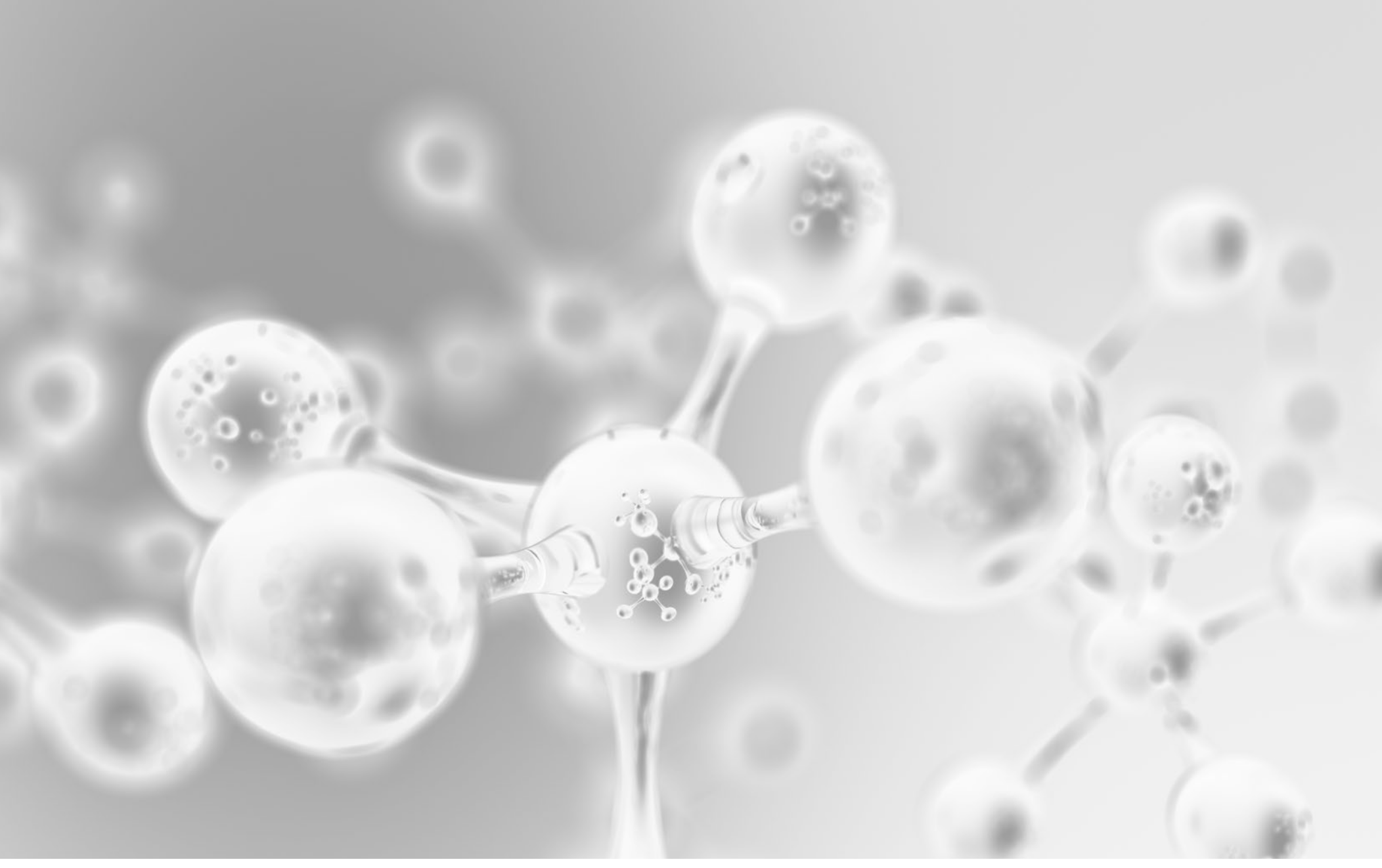

newsletter

OCTOBER 2020